DESCRIPTION

The recessed ceiling mount WS 8 is designed for use in any type of ceiling, offering perfect viewing for any indoor application. The body is 20-gauge stamped steel, and the dome, available clear or tinted, is 1/8" polycarbonate. A liner is included to help conceal camera positioning, and an ABS plastic trim ring is also featured. A day/night camera is also available.

FEATURES

- Includes a choice of cameras
- Fully adjustable 3-axis camera bracket, allowing 360º pan, 180º tilt
- Stamped steel body
- Clear or tinted dome with liner
- ABS plastic trim ring

CAMERA/LENS CHOICES

- Standard or hi-res b/w
- Standard or hi-res color
- Hi-Res day/night
- Fixed 3.6mm
- Vari-focal 4-8mm
- Auto iris 4-9mm
- Available with pan/tilt/3x digital zoom

ARCHITECTURAL/ENGINEERING SPECIFICATIONS

The recessed ceiling mount housing shall be a WS8, with a body manufactured from 20-gauge stamped steel. The dome shall be constructed of 1/8" thick polycarbonate. A trim ring shall be included, and shall be constructed of ABS plastic. Available with standard or hi-res black and white, standard or hi-res color, or hi-res day/night cameras. The lens shall be either fixed, fixed iris vari-focal, or auto iris vari-focal. A camera bracket with three-way adjustment shall be included. Adjustments shall include 360º pan of the entire bracket, 180º tilt of the lens bracket, and a 90º tilt of the lower portion of the bracket in instances where the entire housing must be mounted at an angle. A factory installed NVT twisted pair module shall be available as an option.

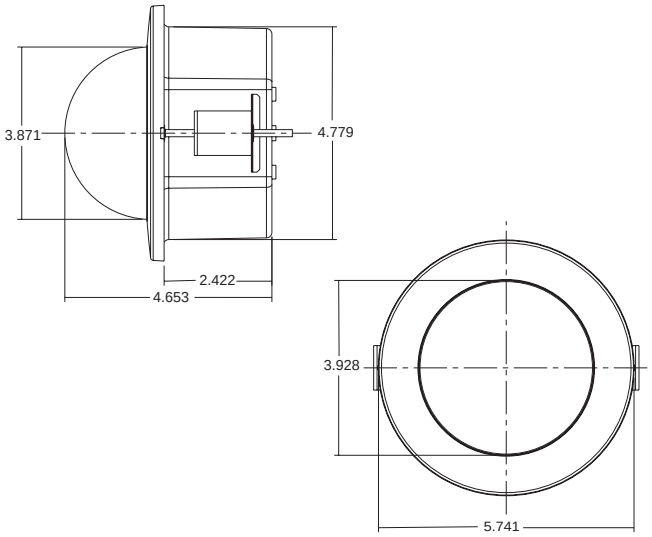

ELECTRICAL SPECIFICATIONS

Input Voltage	12 - 28 VDC or 15 - 28 VAC Must be a regulated power supply
Current Draw	12 VDC - 350mA; 24 VAC - 202mA
Power Requirements	
Camera	12 VDC - 4.2W; 24 VAC - 4.8W
Video Connector	BNC

ENVIRONMENTAL SPECIFICATIONS

Temperature Range	0º to 120º F

CAMERA SPECIFICATIONS - see page 29

MECHANICAL SPECIFICATIONS

Cable Entry	1/2" conduit opening in back box
Pan/Tilt	Manual; 360º pan / 180º tilt
CONSTRUCTION	20-gauge stamped steel 1/8" polycarbonate dome ABS plastic trim ring
DIMENSIONS	
Base	4.875" (H) x 4.78" Diameter
Dome	3.875" diameter
Trim Ring	5.7" diameter

FACTORY INSTALLED OPTIONS

- NVT twisted pair transmitter module (customer must purchase video receiver from NVT)

ADDITIONAL OPTIONS

- WSLP68 - Lens combination pack (6 mm, 8 mm)
- PS12 - 12VDC power supply

SHIPPING SPECIFICATIONS

Model	Unit Weight	Shipping Weight	Shipping Box Dim.
WS8	3 lbs	4 lbs	9 x 9 x 8

* Shipping weights depend on box dimensions.

Product specifications are subject to change without notice.

WARRIOR CAMERA SPECIFICATIONS

	Standard B/W Camera	Hi-Resolution B/W Camera	Standard Color Camera	Hi-Resolution Color Camera	Hi-Resolution Day and Night Camera
Signal System	EIA or CCIR	EIA or CCIR	NTSC or PAL	NTSC or PAL	NTSC or PAL
Imager	1/3" CCD	1/3" CCD	1/3" CCD	1/3" CCD	1/3" CCD
Scanning System	2:1 Interlaced	2:1 Interlaced	2:1 Interlaced	2:1 Interlaced	2:1 Interlaced
Synchronizing System	12 VDC internal	12 VDC internal	12 VDC internal, 24 VAC line lock[2]	12 VDC internal, 24 VAC line lock[2]	12 VDC internal, 24 VAC line lock[2]
Horizontal Resolution	420 TV Lines	570 TV Lines	350 TV Lines	480 TV Lines	480 TV Lines
Signal-to-Noise Ratio	More than 48 dB	More than 48 dB	50 dB or better	50 dB or better	50 dB or better
Minimum Illumination	0.1 Lux (F1.2)	0.08 Lux (F1.2)	0.3 Lux (F1.2)	0.4 Lux (F1.2)	Color - 0.4 Lux (F1.2) B/W - 0.08 Lux (F1.2) Switches to B/W at 1.6 Lux
Video Output	1Vp-p 75 ohm composite	1Vp-p 75 ohm composite	1Vp-p 75 ohm composite	1Vp-p 75 ohm composite	1Vp-p 75 ohm composite
Gain Control	Auto	Auto	ON/OFF selectable dip switch	ON/OFF selectable dip switch	ON/OFF selectable dip switch
Electronic Iris	Auto	Auto	ON/OFF selectable dip switch	ON/OFF selectable dip switch	ON/OFF selectable dip switch
Auto Iris Control	N/A	DC Drive Iris Control w/adjustable level	DC Drive Iris Control w/adjustable level	DC Drive Iris Control w/adjustable level	DC Drive Iris Control w/adjustable level
Switchable Shutter Speed	1/50 1/60 - 1/100,000 sec. (Auto)	1/50 1/60 - 1/100,000 sec. (Auto)	Manual: 1/60, 1/100, 1/1000, 1/100000 dip swtich	Manual: 1/60, 1/100, 1/1000, 1/100000 dip swtich	Manual: 1/60, 1/100, 1/1000, 1/100000 dip swtich
White Balance	N/A	N/A	AWB/Indoor/Outdoor/ATW	AWB/Indoor/Outdoor/ATW	AWB/Indoor/Outdoor/ATW
Flickerless	N/A	N/A	ON/OFF selectable dip switch	ON/OFF selectable dip switch	ON/OFF selectable dip switch
Backlight Compensation	Auto	Auto	ON/OFF selectable dip switch	ON/OFF selectable dip switch	ON/OFF selectable dip switch
Lenses	2.5,3.6,6,8,12,16mm Fixed[3] 4-8mm Fixed Iris Varifocal[1]	2.5,3.6,6,8,12,16mm Fixed[3] 4-8mm Fixed Iris Varifocal[1] 3.5-8mm Auto-Iris Varifocal[1]	2.5,3.6,6,8,12,16mm Fixed[3] 4-8mm Fixed Iris Varifocal[1] 4-9mm Auto-Iris Varifocal[1]	2.5,3.6,6,8,12,16mm Fixed[3] 4-8mm Fixed Iris Varifocal[1] 4-9mm Auto-Iris Varifocal[1]	2.5,3.6,6,8,12,16mm Fixed[3] 4-8mm Fixed Iris Varifocal[1] 4-9mm Auto-Iris Varifocal[1]

1 - Not available on Warrior 5 and 6 2- Not available on Warrior Pan/Tilt 3 - Warrior 5 and 6 2.5mm and 3.6mm only

WARRIOR LENS SPECIFICATIONS

FIXED LENSES						
Focal Length	2.5mm	3.6mm	6mm	8mm	12mm	16mm
Format Size	1/3"	1/3"	1/3"	1/3"	1/3"	1/3"
Relative Aperture (F)	2.0	2.0	2.0	2.0	2.0	2.0

VARIFOCAL LENSES		
Focal Length	4-8mm fixed	4-9mm auto iris
Format Size	1/3"	1/3"
Relative Aperture (F)	2 - 2.6	1.6 - 2.4

WARRIOR 1-4, 7-8 MODEL CHART

W S 1 C - 3 0 N F 3 - X 1 2

Warrior Series

C - Clear Dome
G - Gold Dome
M - Mirrored Dome
T - Tinted Dome
Warrior 1, 2, 7, & 8

10 - Standard B/W
20 - Hi-Res B/W
30 - Standard Color
50 - Hi-Res Color
70 - Hi-Res Day/Night

N - NTSC
P - PAL

F - Fixed Lens
V - Manual Vari-focal
A - Auto Iris Vari-focal

2 - 2.5mm Lens
3 - 3.6mm Lens
6 - 6mm Lens
8 - 8mm Lens
12 - 12mm Lens
16 - 16mm Lens

Option
1 - Heater
2 - NVT Twisted Pair
3 - IFS Fiber Board

Some options may not be available on all models

WARRIOR 5 AND 6 MODEL CHART

W S 5 (B) - 1 0 N F - X 2

Warrior Series

B - Polished Brass Faceplate
E - Satin Brass Faceplate
S - Stainless Steel Faceplate

10 - Standard B/W
20 - Hi-Res B/W
30 - Standard Color
50 - Hi-Res Color
70 - Hi-Res Day/Night

N - NTSC
P - PAL

F - Fixed Lens

Option
2 - NVT Twisted Pair

WARRIOR PAN/TILT MODEL CHART

W P 7 C - 2 0 N F 3

Warrior Pan/Tilt

1 - Surface Mount
7 - Pendant Mount
8 - Ceiling Mount

C - Clear Dome
T - Tinted Dome
G - Gold Dome
M - Mirrored Dome

10 - Standard B/W
20 - Hi-Res B/W
30 - Standard Color
50 - Hi-Res Color
55 - Hi-Res Color Digital Zoom
70 - Hi-Res Day/Night

N - NTSC
P - PAL

F - Fixed Lens
A - Auto Iris*
** Not available with Digital Zoom*

2 - 2.5mm Lens
3 - 3.6mm Lens
6 - 6mm Lens
8 - 8mm Lens
12 - 12mm Lens
16 - 16mm Lens

Product specifications are subject to change without notice.