CAMERA SPECIFICATIONS

Power Input - 24 VAC
Image Sensor - Interline 1/3" Sony Super HAD CCD
Scanning System - 2:1 Interlaced
Sync System - Internal/Linelock (Switchable)
Horizontal Resolution - 460 TV Lines
Signal to Noise Ratio - 48db or more (AGC off)
Minimum Resolution (F1.2) - 1.2 Lux Normal Mode
0.8 Lux Hi Gain Mode
Gain Control - Automatic
Backlight Compensation - Center Zone Detection (on/off switchable)
White Balance - Automatic/Hold (push lock)
Dimensions - 1.9" (H) x 1.9" (W) x 3.3" (L)

Super HAD CCD is a registered trademark of Sony Corporation

LENS SPECIFICATIONS

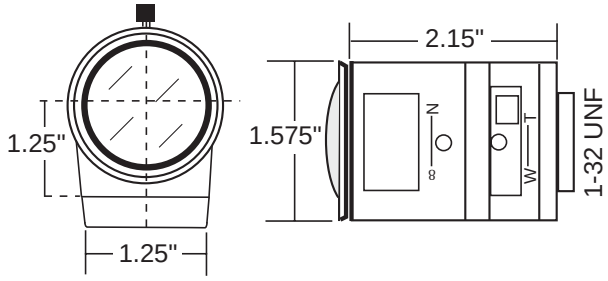

2.8 - 12mm Lens
Focal Length - 2.8 to 12mm
Iris Range - F1.4 to 360
Iris Operation - Auto Iris
Focus Operation - Manual
Diameter - 1.57"
Length - 2.2"

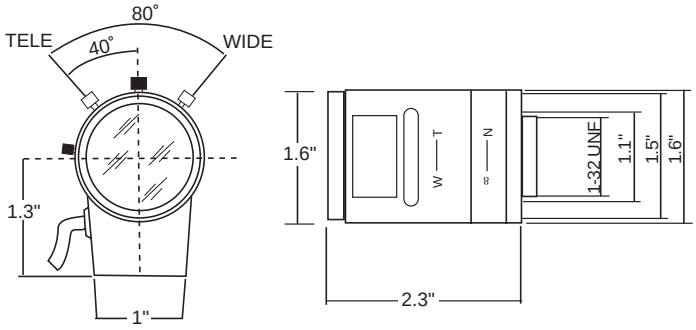

5 - 50mm Lens
Focal Length - 5 to 50mm
Iris Range - F1.4 to 185
Iris Operation - Auto Iris
Focus Operation - Manual
Diameter - 1.7"
Length - 2.3"

Neither the camera nor lens is available as a separately ordered item

Product specifications are subject to change without notice.

Videolarm. 2525 Park Central Blvd • Decatur GA 30035 • 770-987-7550 • www.videolarm.com • info@videolarm.com